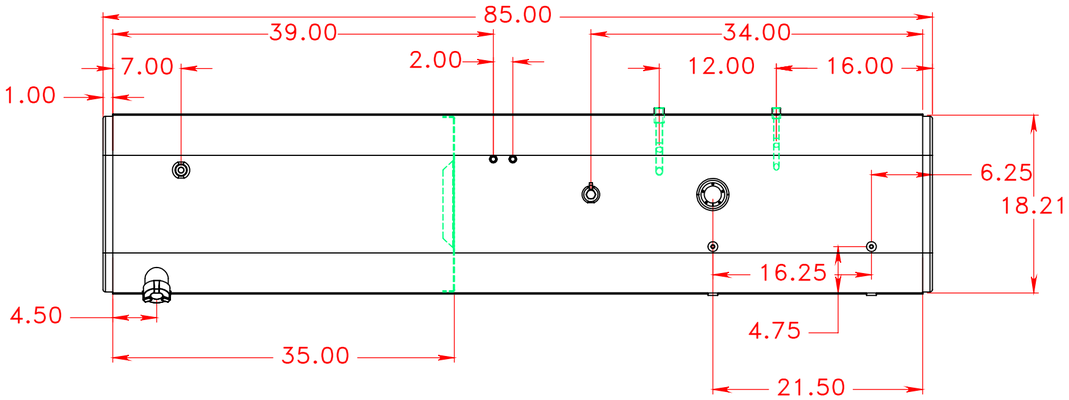

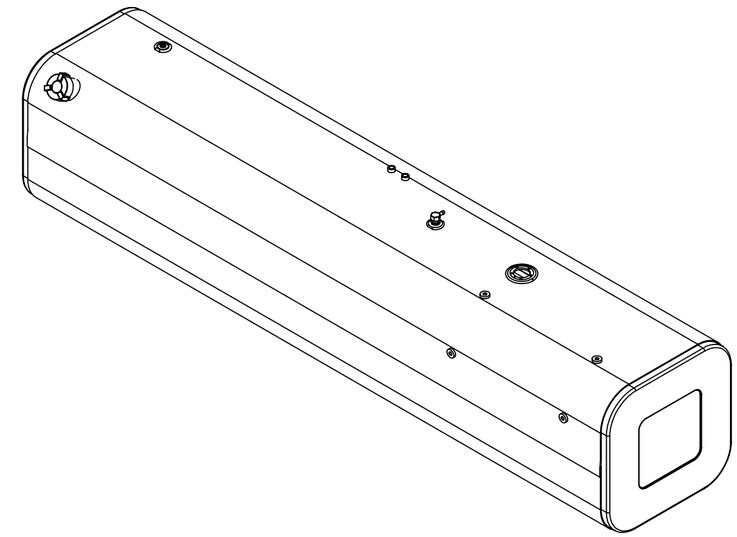

NOTES FOR STANDARD CONSTRUCTION:
...MEETS FMCSA REQUIREMENTS.
...PRESSURE TESTED @ 5psi
...INTERIOR FREE OF FOREIGN MATTER.
...FILLER CAP, DRAIN PLUG & VENT PROVIDED.
...REPLACEABLE DRAW/RETURN TUBES
...FULL BAFFLE(S) WHERE SHOWN
...ALUMINUM CONSTRUCTION:
5052-H32 ALUMINUM, BRIGHT FINISH
HEADS ARE 0.100" & SHELL IS 0.125"
...ALL OPENINGS PLUGGED PRIOR TO SHIPPING

ITEM NO.	PART NUMBER	DESCRIPTION	QTY.
1	452-0998	2" Thermal Relief Fuel Cap	1
2	454-0937	1/2" NPT Ball Check Vent	1
3	458-0100	1/2" NPT Ball Check Drain Plug	1
4	172-0014	12 ga HRPO Steel Baffle	2
5	126-0300	12ga HRPO Steel Bottom Wrap	1
6	126-0299	12ga HRPO Steel Top Wrap	1
7	170-0014	17.63x18 Head	2
8	490-1002	1/2" Steel Coupling Down Tube	1
9	490-1003	3/8" Steel Coupling Down Tube	1
10	270-0006	3/8" FNTP weld flange	1
11	270-0007	1/2" FNPT Steel weld flange	2
12	275-0002	Steel Float Riser	1
13	326-0001	2" Steel Filler Neck	1
14	227-0001	Step Boss	4
15	322-0003	1/4" NPT Steel Coupling	2

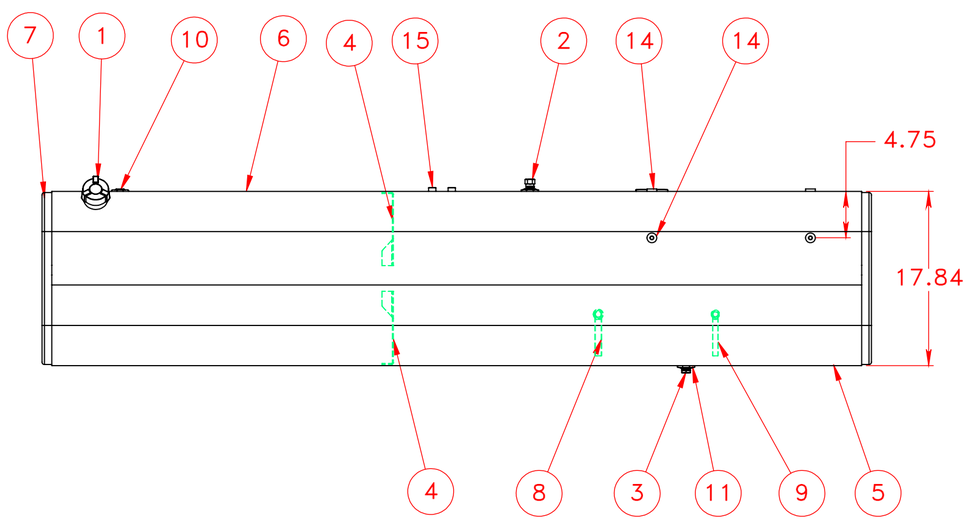

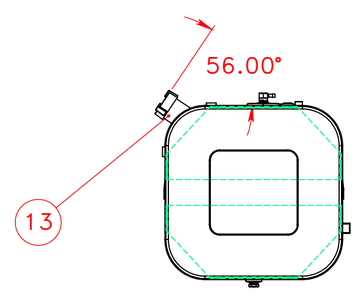

PROPRIETARY AND CONFIDENTIAL
THE INFORMATION CONTAINED IN THIS DRAWING IS THE SOLE PROPERTY OF PROPOWER MFG. INC. ANY REPRODUCTION IN PART OR AS A WHOLE WITHOUT THE WRITTEN PERMISSION OF PROPOWER MFG. INC. IS PROHIBITED.

UNLESS OTHERWISE SPECIFIED:
DIMENSIONS ARE IN INCHES
TOLERANCES:
FRACTIONAL ±
ANGULAR: MACH ± BEND ±
TWO PLACE DECIMAL ±
THREE PLACE DECIMAL ±
INTERPRET GEOMETRIC TOLERANCING PER:
MATERIAL ALUMINUM
FINISH
DO NOT SCALE DRAWING

	NAME	DATE
DRAWN	A.B	01/08/09
CHECKED		
ENG APPR.		
MFG APPR.		
Q.A.		

COMMENTS:
THIRD ANGLE PROJECTION

PROPOWER MFG. INC.
WINDSOR, ONTARIO, CANADA
Ph; 519-737-1197 Fax; 519-737-1918
TOLL FREE 1-877-741-2365 Web; metaltanks.com

TITLE:
FL-R18-18RFAS85
112 US GROSS GALLONS
106 USEBLE GALLONS
DIESEL FUEL TANK

SIZE C | DWG. NO. 10407 | REV
SCALE: 1:12 | WEIGHT: 200 LBS | SHEET 1 OF 2