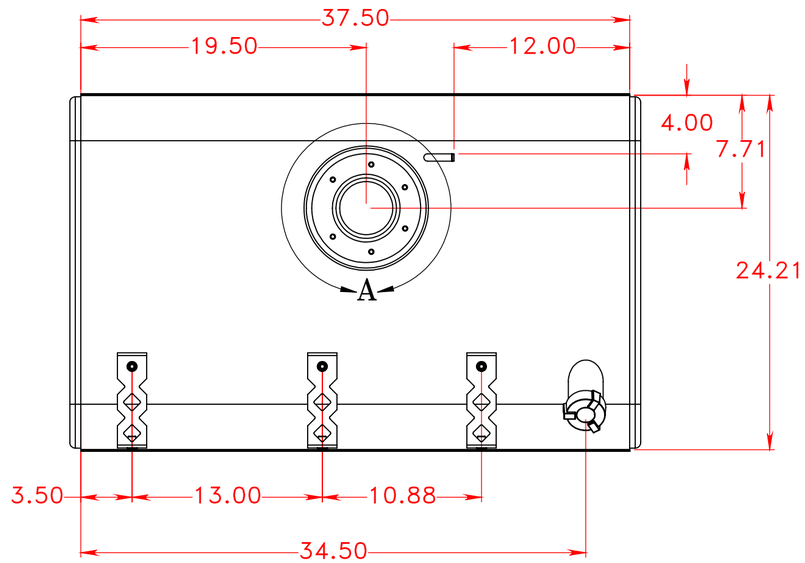

FLOAT ORIENTATION
** CHECK CAREFULLY **

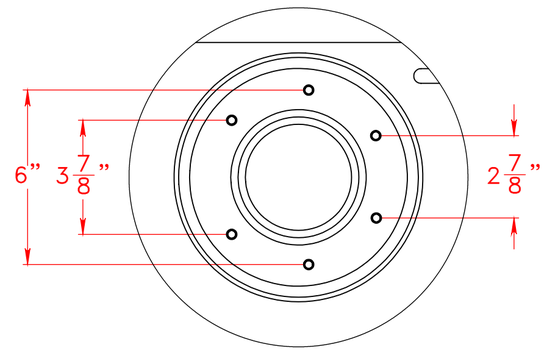

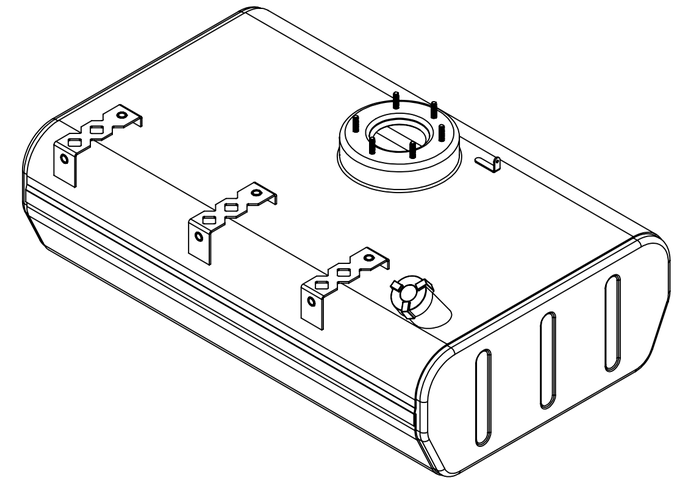

DRIVER SIDE TANK

TACK WELD BOLTS TO ADAPTER PLATE
SEAL ADAPTER PLATE TO ALUMINUM RISER
WITH LOCTITE # 518 FLANGE SEALANT

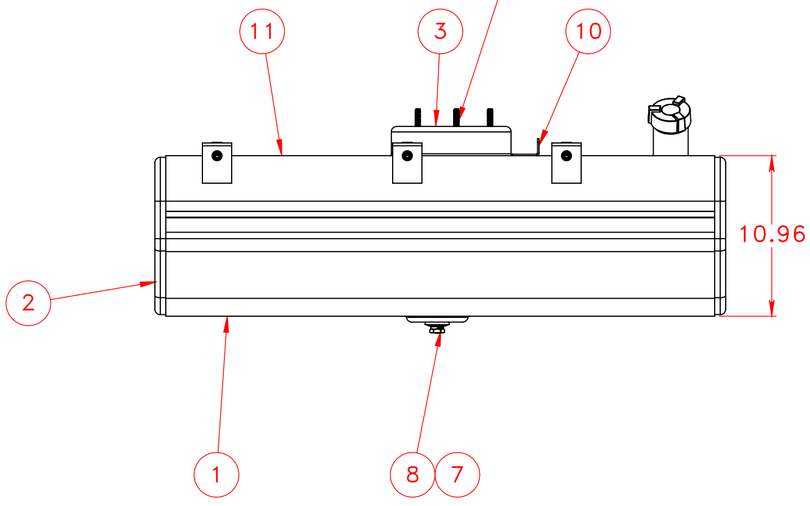

DETAIL A
SCALE 1 : 4

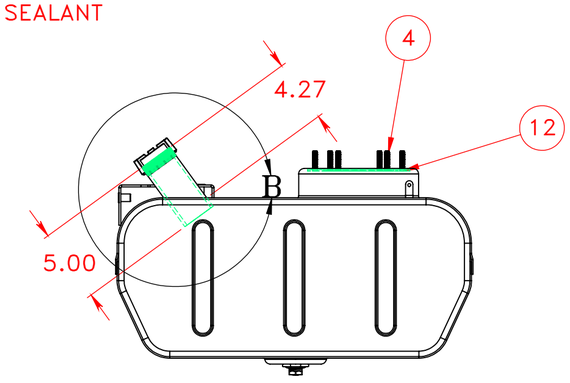

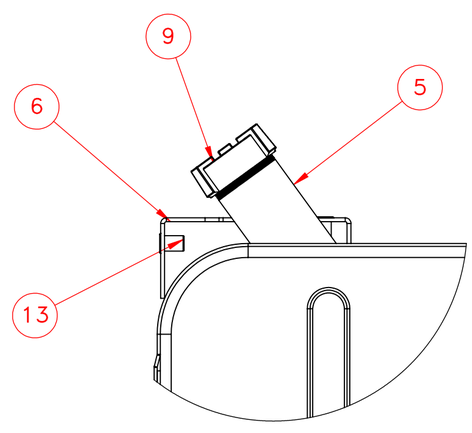

DETAIL B
SCALE 1 : 4

ITEM NO.	PART NUMBER	DESCRIPTION	QTY.
1	116-0341	1/8" Aluminum Bottom Wrap	1
2	160-0103	GM 11X24 Aluminum Head	2
3	265-0004	Aluminum 6 Hole GM Float Dome Riser	1
4	506-0001	Formed hex screw, M8 x 1.25 x 35	6
5	326-0004	2" Filler Neck 5" Long	1
6	266-0076	GM Top Step Bracket	3
7	260-0005	1/2" FNPT Aluminum weld flange	1
8	458-0100	1/2" NPT Ball Check Drain Plug	1
9	452-0998	2" Thermal Relief Fuel Cap	1
10	266-0077	Ground Tab	1
11	116-0343	1/8" Aluminum Top Wrap	1
12	275-0011	Steel 6-Hole GM Float Bolt Adapter	1
13	517-0001	8mm Rivet Nut	6

NOTES FOR STANDARD CONSTRUCTION:
...MEETS FMCSA REQUIREMENTS.
...PRESSURE TESTED @ 5psi
...INTERIOR FREE OF FOREIGN MATTER.
...FILLER CAP & DRAIN PLUG PROVIDED.
...ALUMINUM CONSTRUCTION:
5052-H32 ALUMINUM, BRIGHT FINISH
HEADS ARE 0.100" & SHELL IS 0.125"
...ALL OPENINGS PLUGGED PRIOR TO SHIPPING

PROPRIETARY AND CONFIDENTIAL
THE INFORMATION CONTAINED IN THIS DRAWING IS THE SOLE PROPERTY OF PROPOWER MFG. INC. ANY REPRODUCTION IN PART OR AS A WHOLE WITHOUT THE WRITTEN PERMISSION OF PROPOWER MFG. INC. IS PROHIBITED.

UNLESS OTHERWISE SPECIFIED:
DIMENSIONS ARE IN INCHES
TOLERANCES:
FRACTIONAL ± 1/16
ANGULAR: MACH ± 1° BEND ± 1°
TWO PLACE DECIMAL ± .06
THREE PLACE DECIMAL ± .031
INTERPRET GEOMETRIC TOLERANCING PER:
MATERIAL ALUMINUM
FINISH
DO NOT SCALE DRAWING

	NAME	DATE
DRAWN	A.B	01/08/15
CHECKED		
ENG APPR.		
MFG APPR.		
Q.A.		

COMMENTS:
THIRD ANGLE PROJECTION

PROPOWER MFG. INC.
WINDSOR, ONTARIO, CANADA
Ph; 519-737-1197 Fax; 519-737-1918
TOLL FREE 1-877-741-2365 Web; metaltanks.com

TITLE: GM-L11-24RFAS39-A
42 US GROSS GALLONS
40 USEBLE GALLONS
DIESEL FUEL TANK

SIZE C | DWG. NO. 17906 | REV
SCALE: 1:8 | WEIGHT: 35 LBS | SHEET 1 OF 2