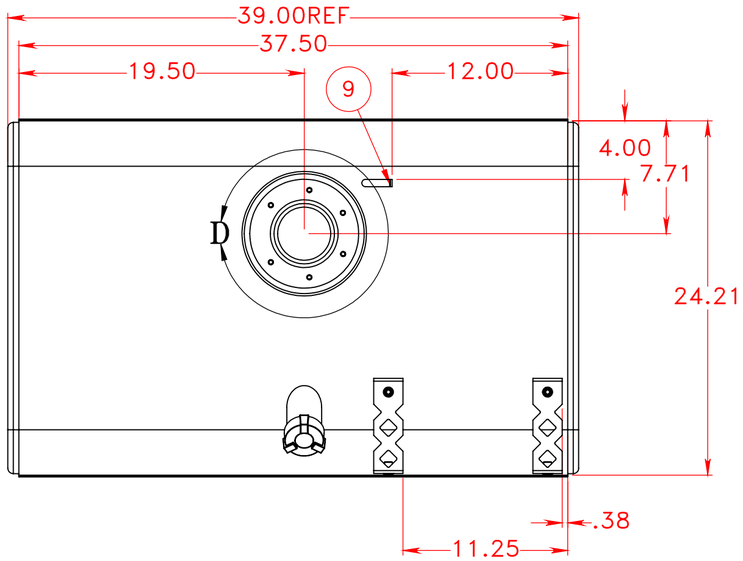

ITEM NO.	PART NUMBER	DESCRIPTION	QTY.
1	116-0218	1/8" Aluminum Bottom Wrap	1
2	326-0004	2" Filler Neck 5" Long	1
3	260-0005	1/2" FNPT Aluminum weld flange	1
4	458-0100	1/2" NPT Ball Check Drain Plug	1
5	452-0998	2" Thermal Relief Fuel Cap	1
6	160-0086	GM 15X24 Aluminum Head	2
7	265-0004	Aluminum 6 Hole GM Float Dome Riser	1
8	266-0076	GM Top Step Bracket	2
9	266-0077	Ground Tab	1
10	116-0231	1/8" Aluminum Top Wrap	1
11	517-0001	8mm Rivet Nut	4
12	275-0011	Steel 6-Hole GM Float Bolt Adapter	1
13	506-0001	Formed hex screw, M8 x 1.25 x 35	6

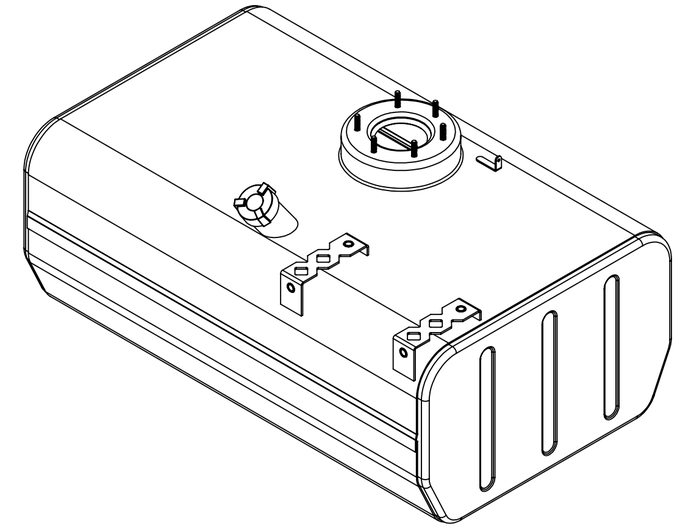

NOTES FOR STANDARD CONSTRUCTION:
...MEETS FMCSA REQUIREMENTS.
...PRESSURE TESTED @ 5psi
...INTERIOR FREE OF FOREIGN MATTER.
...FILLER CAP, DRAIN PLUG PROVIDED.
...ALUMINUM CONSTRUCTION:
5052-H32 ALUMINUM, BRIGHT FINISH
HEADS ARE 0.100" & SHELL IS 0.125"
...ALL OPENINGS PLUGGED PRIOR TO SHIPPING

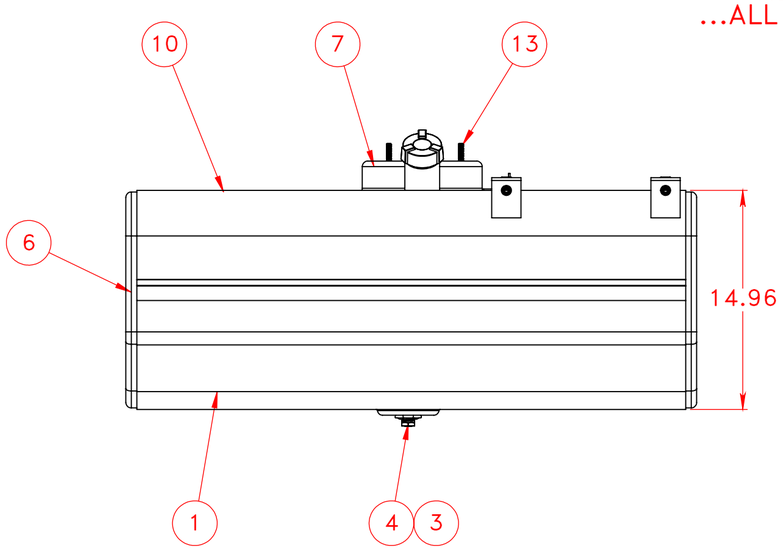

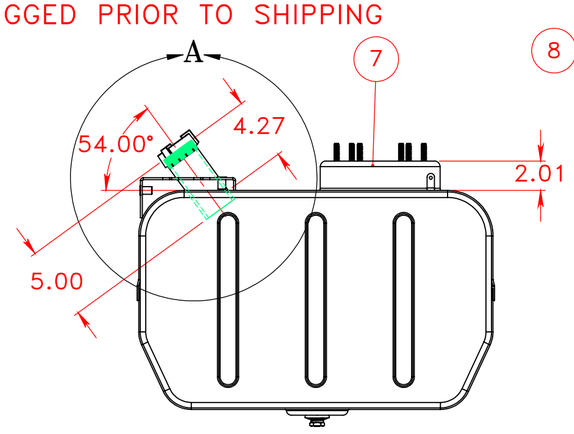

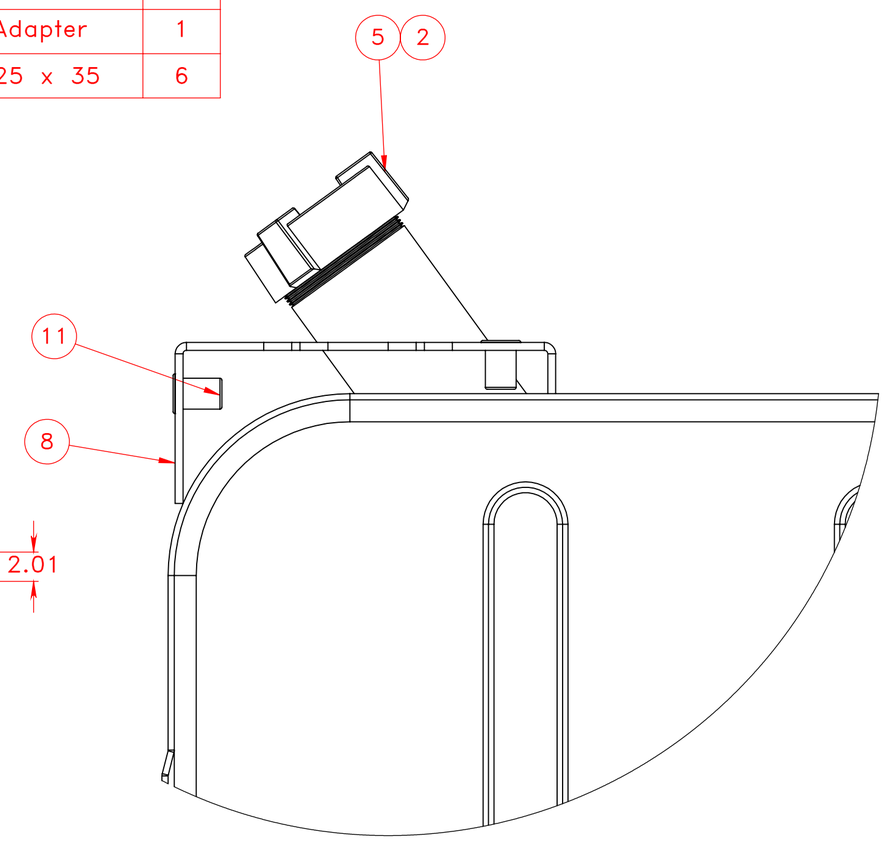

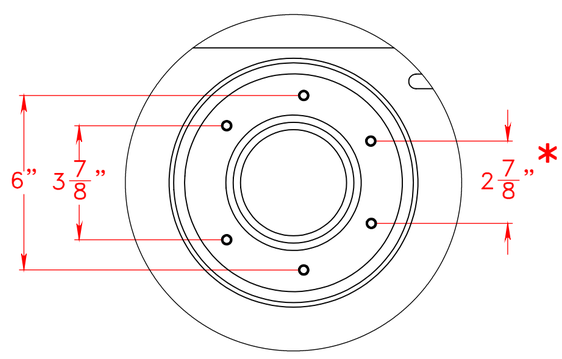

DETAIL D
SCALE 1 : 4

FLOAT ORIENTATION
** CHECK CAREFULLY **

DETAIL A
SCALE 1 : 2

PROPRIETARY AND CONFIDENTIAL
THE INFORMATION CONTAINED IN THIS DRAWING IS THE SOLE PROPERTY OF PROPOWER MFG. INC. ANY REPRODUCTION IN PART OR AS A WHOLE WITHOUT THE WRITTEN PERMISSION OF PROPOWER MFG. INC. IS PROHIBITED.

UNLESS OTHERWISE SPECIFIED:
DIMENSIONS ARE IN INCHES
TOLERANCES:
FRACTIONAL ± 1/16
ANGULAR: MACH ± 1° BEND ± 1°
TWO PLACE DECIMAL ± .06
THREE PLACE DECIMAL ± .031
INTERPRET GEOMETRIC TOLERANCING PER:
MATERIAL ALUMINUM
FINISH
DO NOT SCALE DRAWING

	NAME	DATE
DRAWN	A.B	09/10/12
CHECKED		
ENG APPR.		
MFG APPR.		
Q.A.		

COMMENTS:
THIRD ANGLE PROJECTION

PROPOWER MFG. INC.
WINDSOR, ONTARIO, CANADA
Ph; 519-737-1197 Fax; 519-737-1918
TOLL FREE 1-877-741-2365 Web; metaltanks.com

TITLE:
GM-R15-24RFAS39
59 US GROSS GALLONS
56 USEBLE GALLONS
DIESEL FUEL TANK

SIZE C | DWG. NO. 14200 | REV
SCALE: 1:8 | WEIGHT: 39 LBS | SHEET 1 OF 2