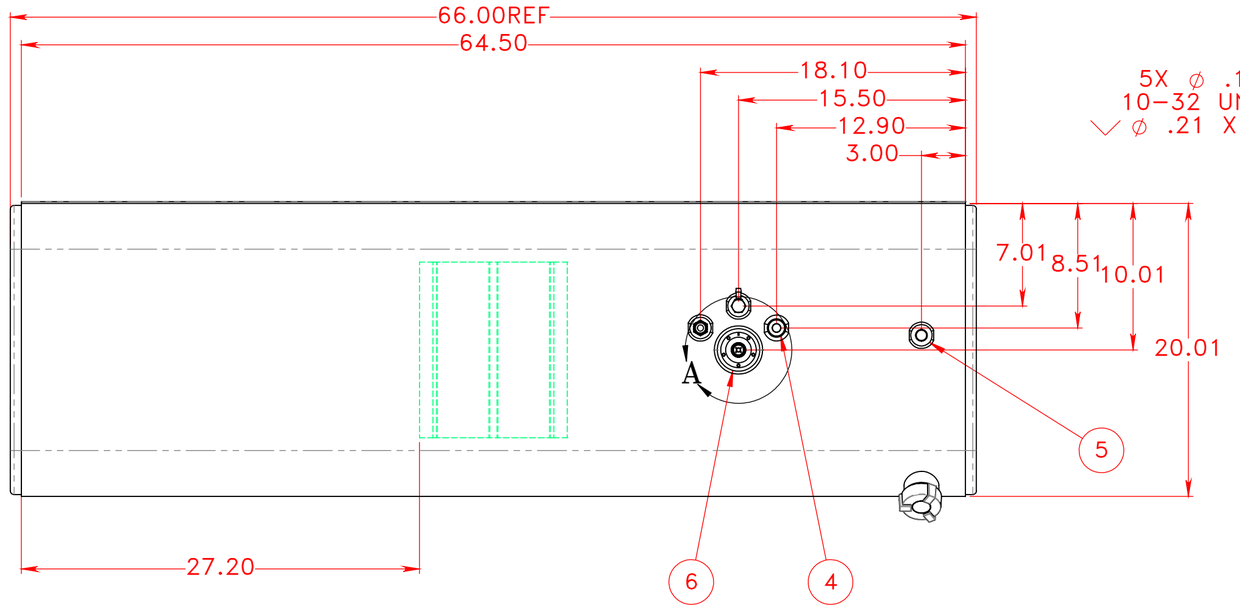

PASSENGER SIDE TANK

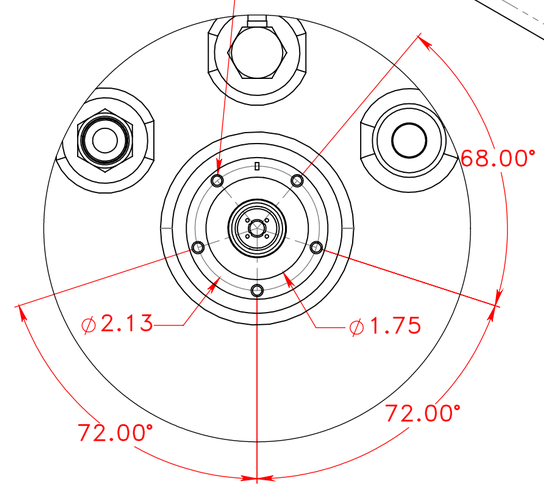

DETAIL A
SCALE 1 : 2

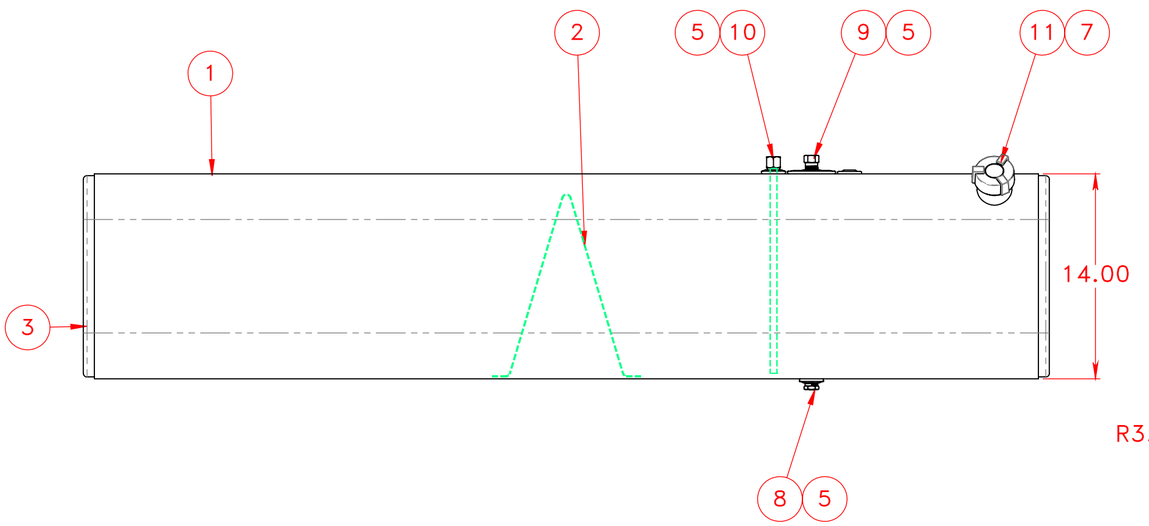

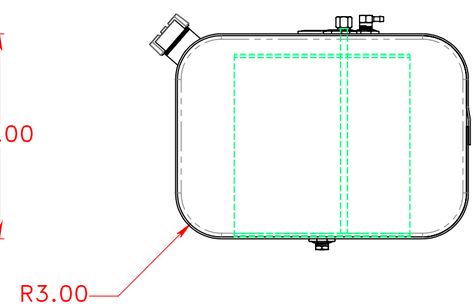

ITEM NO.	PART NUMBER	DESCRIPTION	QTY.
1	116-0529	1/8" Aluminum Wrap	1
2	162-0075	Aluminum Tank Baffle x 1/8"	1
3	160-0010	14x20 Aluminum Head	2
4	260-0003	3/8" FNPT Aluminum weld flange	1
5	260-0005	1/2" FNPT Aluminum weld flange	4
6	265-0010	Aluminum Float Riser	1
7	316-0004	2" Aluminum Filler Neck	1
8	458-0100	1/2" NPT Ball Check Drain Plug	1
9	454-0937	1/2" NPT Ball Check Vent	1
10	490-0014-Z	1/2" NPT Down Tube	1
11	452-0998	2" Thermal Relief Fuel Cap	1

NOTES FOR STANDARD CONSTRUCTION:
...MEETS FMCSA REQUIREMENTS.
...PRESSURE TESTED @ 5psi
...INTERIOR FREE OF FOREIGN MATTER.
...FILLER CAP, DRAIN PLUG & VENT PROVIDED.
...REPLACEABLE DRAW TUBE
...ALUMINUM CONSTRUCTION:
5052-H32 ALUMINUM, BRIGHT FINISH
HEADS ARE 0.100" & SHELL IS 0.125"
...ALL OPENINGS PLUGGED PRIOR TO SHIPPING

PROPRIETARY AND CONFIDENTIAL
THE INFORMATION CONTAINED IN THIS DRAWING IS THE SOLE PROPERTY OF PROPOWER MFG. INC. ANY REPRODUCTION IN PART OR AS A WHOLE WITHOUT THE WRITTEN PERMISSION OF PROPOWER MFG. INC. IS PROHIBITED.

UNLESS OTHERWISE SPECIFIED:
DIMENSIONS ARE IN INCHES
TOLERANCES:
FRACTIONAL ± 1/16
ANGULAR: MACH ± 1° BEND ± 1°
TWO PLACE DECIMAL ± .06
THREE PLACE DECIMAL ± .031
INTERPRET GEOMETRIC TOLERANCING PER:
MATERIAL ALUMINUM
FINISH
DO NOT SCALE DRAWING

	NAME	DATE
DRAWN	A.B	09/15/14
CHECKED		
ENG APPR.		
MFG APPR.		
Q.A.		

COMMENTS:
THIRD ANGLE PROJECTION

PROPOWER MFG. INC.
WINDSOR, ONTARIO, CANADA
Ph; 519-737-1197 Fax; 519-737-1918
TOLL FREE 1-877-741-2365 Web; metaltanks.com

TITLE: FD-R14-20RFA66
78 US GROSS GALLONS
74 USEBLE GALLONS
DIESEL FUEL TANK

SIZE C | DWG. NO. 17442 | REV
SCALE: 1:8 | WEIGHT: 62 lbs | SHEET 1 OF 2