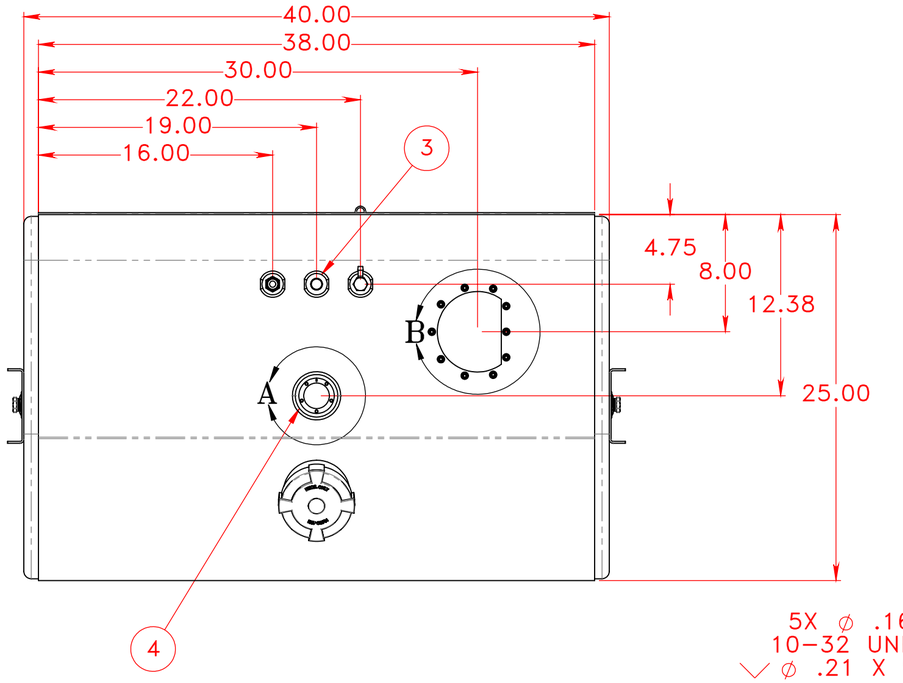

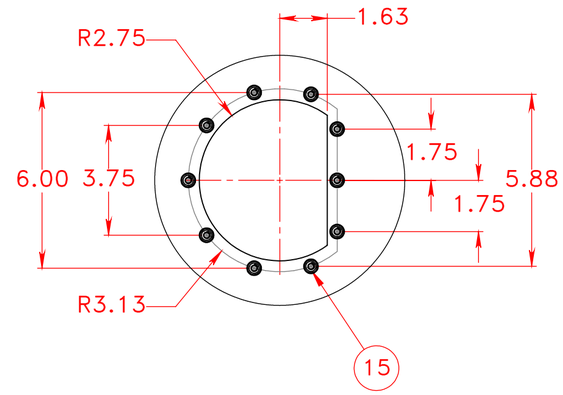

DETAIL B
SCALE 1 : 4

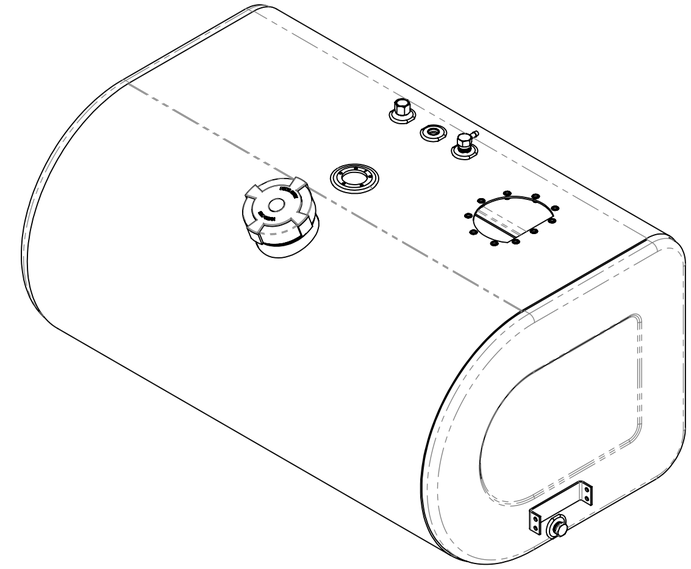

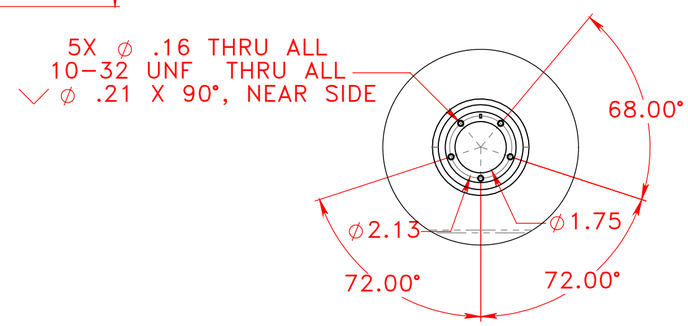

DETAIL A
SCALE 1 : 4

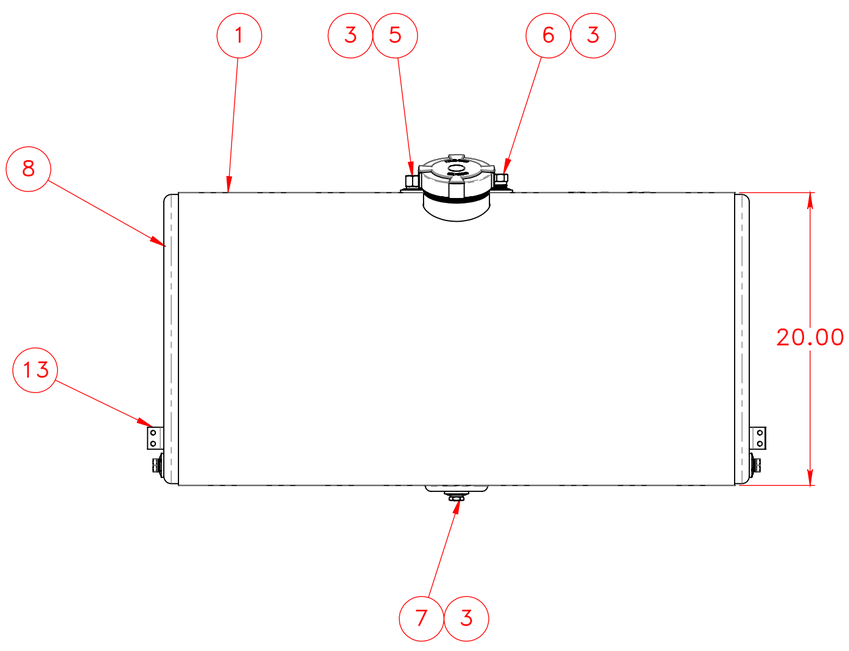

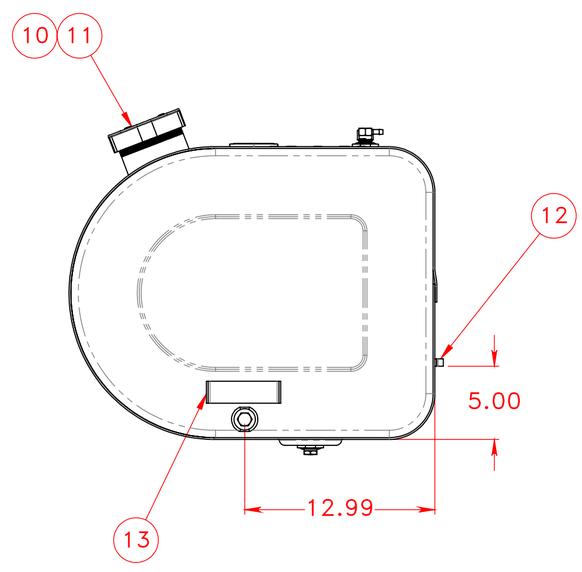

ITEM NO.	PART NUMBER	DESCRIPTION	QTY.
1	126-0412	12ga HRPO Steel Wrap	1
2	490-2001	Down Tube Support	1
3	270-0007	1/2" FNPT Steel weld flange	6
4	275-0002	Steel Float Riser	1
5	490-0020-Z	1/2" NPT Down Tube	1
6	454-0937	1/2" NPT Ball Check Vent	1
7	458-0100	1/2" NPT Ball Check Drain Plug	1
8	170-0040	20x25 D head	1
9	170-0040	20x25 D Head	1
10	326-0020	4" Filler Neck	1
11	452-1015	4" Pressure Relief Fuel Cap	1
12	276-0005	BktVentHoseClip	1
13	276-0047	CrossoverSupporBkt	2
14	368-0010	1/2" NPT Brass Plug	2
15	518-0009	1/4"-20 Rivet Nut	10

NOTES FOR STANDARD CONSTRUCTION:
...MEETS FMCSA REQUIREMENTS.
...PRESSURE TESTED @ 5psi.
...INTERIOR FREE OF FOREIGN MATTER.
...FILLER CAP, DRAIN PLUG & VENT PROVIDED.
...REPLACEABLE DRAW TUB
...STEEL CONSTRUCTION 12ga HRPO
...STEEL FINISH;
SEMI-GLOSS BLACK ENAMEL APPLIED.
...ALL OPENINGS PLUGGED & THE INTERIOR FOGGED WITH ANTI-CORROSION OIL PRIOR TO SHIPPING

PROPRIETARY AND CONFIDENTIAL
THE INFORMATION CONTAINED IN THIS DRAWING IS THE SOLE PROPERTY OF PROPOWER MFG. INC. ANY REPRODUCTION IN PART OR AS A WHOLE WITHOUT THE WRITTEN PERMISSION OF PROPOWER MFG. INC. IS PROHIBITED.

UNLESS OTHERWISE SPECIFIED:
DIMENSIONS ARE IN INCHES
TOLERANCES:
FRACTIONAL ± 1/16
ANGULAR: MACH ± 1° BEND ± 1°
TWO PLACE DECIMAL ± .06
THREE PLACE DECIMAL ± .031
INTERPRET GEOMETRIC TOLERANCING PER:
MATERIAL HRPO STEEL
FINISH
DO NOT SCALE DRAWING

	NAME	DATE
DRAWN	A.B	10/09/14
CHECKED		
ENG APPR.		
MFG APPR.		
Q.A.		

COMMENTS:
THIRD ANGLE PROJECTION

PROPOWER MFG. INC.
WINDSOR, ONTARIO, CANADA
Ph; 519-737-1197 Fax; 519-737-1918
TOLL FREE 1-877-741-2365 Web; metaltanks.com

TITLE:
FD-20-25DF40-A
78 US GROSS GALLONS
75 USEBLE GALLONS
DIESEL FUEL TANK

SIZE C | DWG. NO. 17528 | REV
SCALE: 1:8 | WEIGHT: 150 LBS | SHEET 1 OF 2