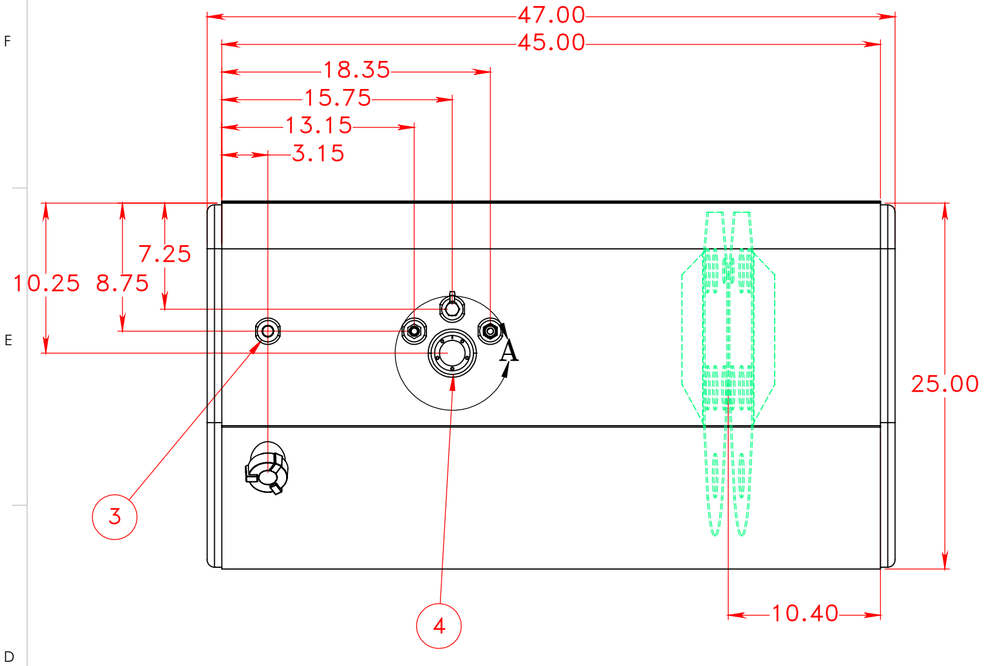

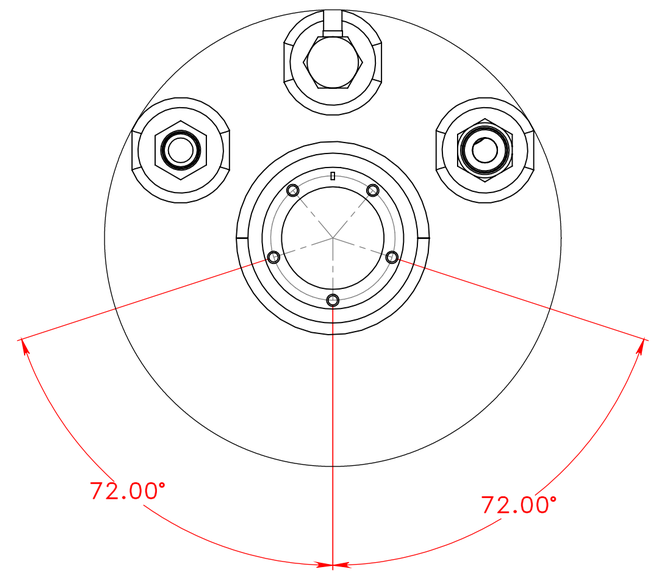

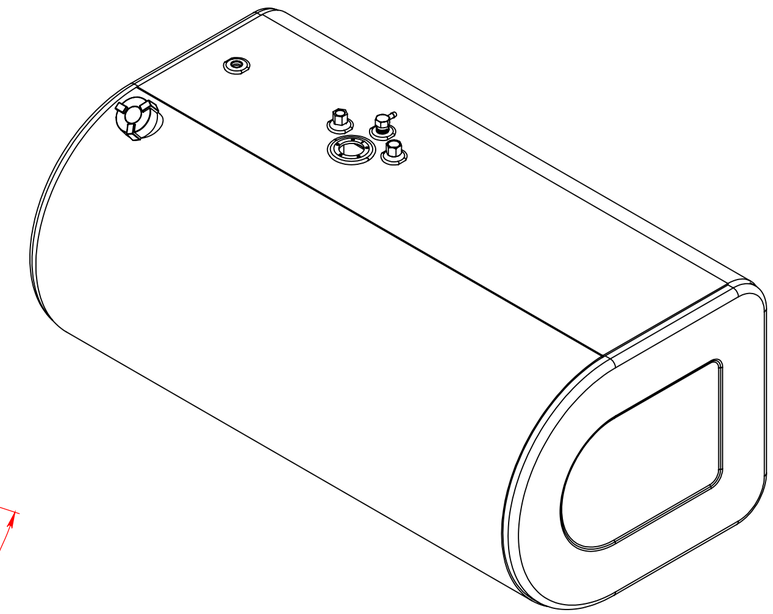

DETAIL A
SCALE 1 : 2

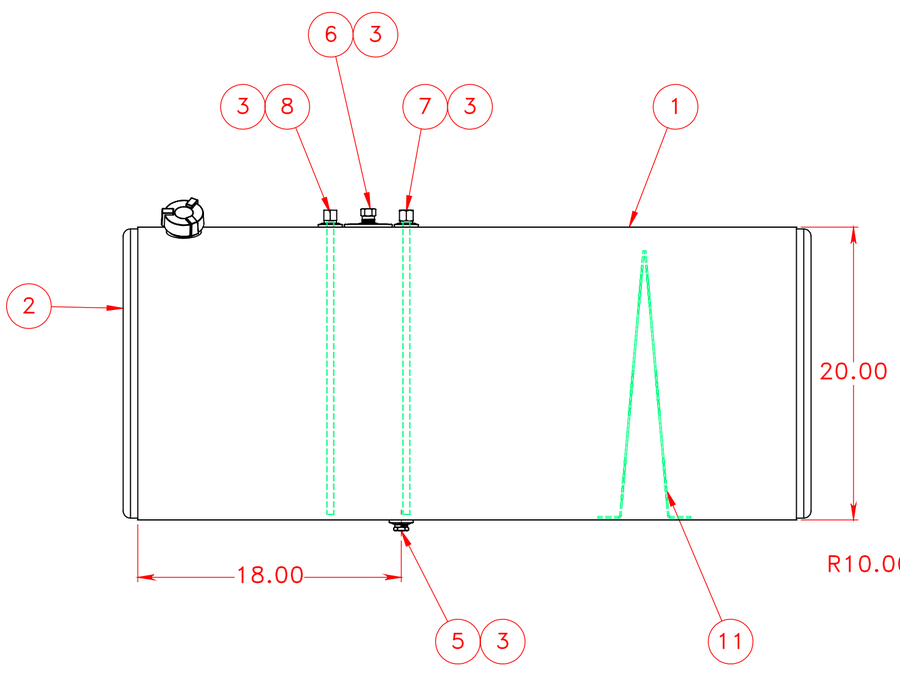

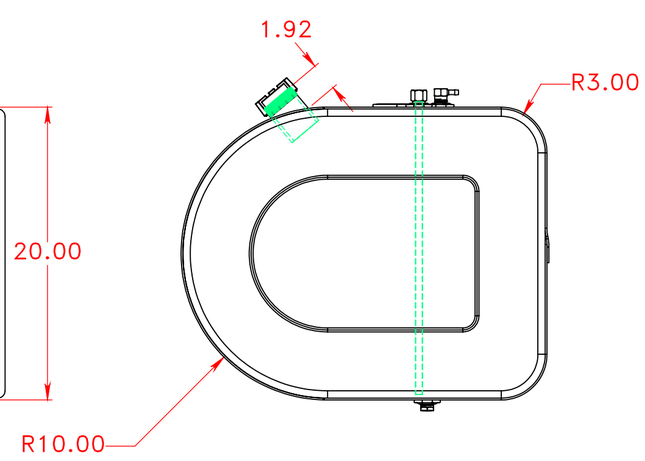

ITEM NO.	PART NUMBER	DESCRIPTION	QTY.
1	126-0093	12 ga HRPO STEEL WRAP	1
2	170-0040	20x25 D Head	2
3	270-0007	1/2" FNPT Steel weld flange	5
4	275-0002	Steel Float Riser	1
5	458-0100	1/2" NPT Ball Check Drain Plug	1
6	454-0937	1/2" NPT Ball Check Vent	1
7	490-0020-Z	1/2" NPT Down Tube	1
8	491-0020-Z	3/8" FNPT X 1/2" NPT 1/2" Down Tube	1
9	326-0001	2" Steel Filler Neck	1
10	452-0998	2" Thermal Relief Fuel Cap	1
11	162-0040	Baffle	1

NOTES FOR STANDARD CONSTRUCTION:

...PRESSURE TESTED @ 5psi PER FMCSA
...INTERIOR FREE OF FOREIGN MATTER.
...FILLER CAP,DRAIN PLUG,DRAW TUB & VENT PROVIDED.
...STEEL CONSTRUCTION 12ga HRPO
...STEEL FINISH;
SEMI-GLOSS BLACK ENAMEL APPLIED.
...ALL OPENINGS PLUGGED & THE INTERIOR FOGGED
WITH ANTI-CORROSION OIL PRIOR TO SHIPPING

PROPRIETARY AND CONFIDENTIAL
THE INFORMATION CONTAINED IN THIS DRAWING IS THE SOLE PROPERTY OF PROPOWER MFG. INC. ANY REPRODUCTION IN PART OR AS A WHOLE WITHOUT THE WRITTEN PERMISSION OF PROPOWER MFG. INC. IS PROHIBITED.

UNLESS OTHERWISE SPECIFIED:
DIMENSIONS ARE IN INCHES
TOLERANCES:
FRACTIONAL ± 1/16
ANGULAR: MACH ± 1° BEND ± 1°
TWO PLACE DECIMAL ± .06
THREE PLACE DECIMAL ± .031
INTERPRET GEOMETRIC TOLERANCING PER:
MATERIAL HRPO STEEL
FINISH
DO NOT SCALE DRAWING

	NAME	DATE
DRAWN	A.B	08/24/11
CHECKED		
ENG APPR.		
MFG APPR.		
Q.A.		

COMMENTS:
THIRD ANGLE PROJECTION

PROPOWER MFG. INC.
WINDSOR, ONTARIO, CANADA
Ph; 519-737-1197 Fax; 519-737-1918
TOLL FREE 1-877-741-2365 Web; metaltanks.com

TITLE:
IN-L20-25DF47
93usg DIESEL FUEL TANK

SIZE C | DWG. NO. 12788 | REV
SCALE: 1:8 | WEIGHT: 180 LBS | SHEET 1 OF 2