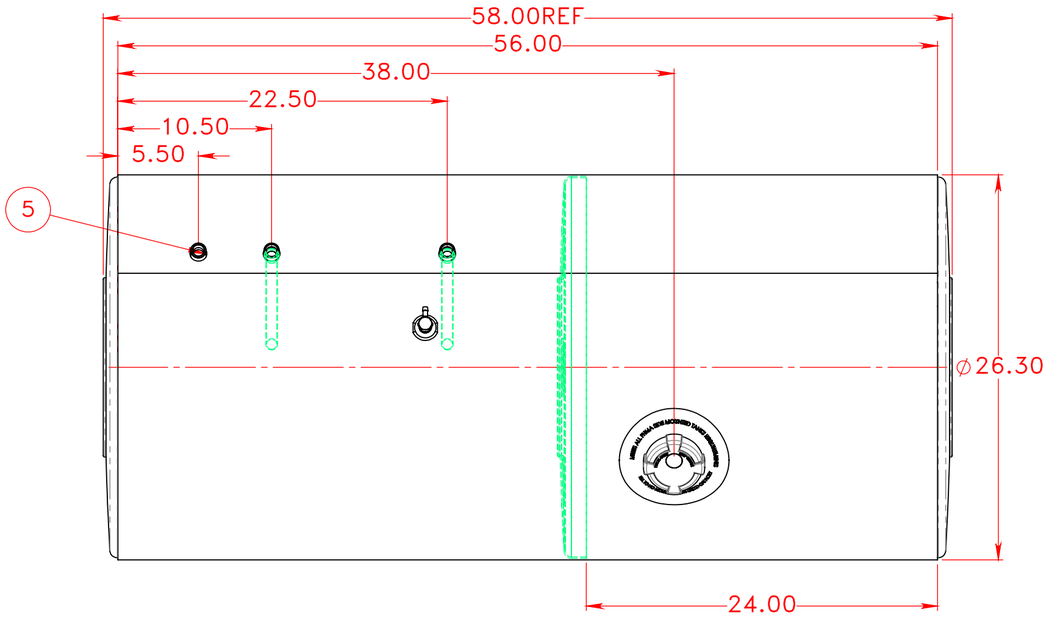

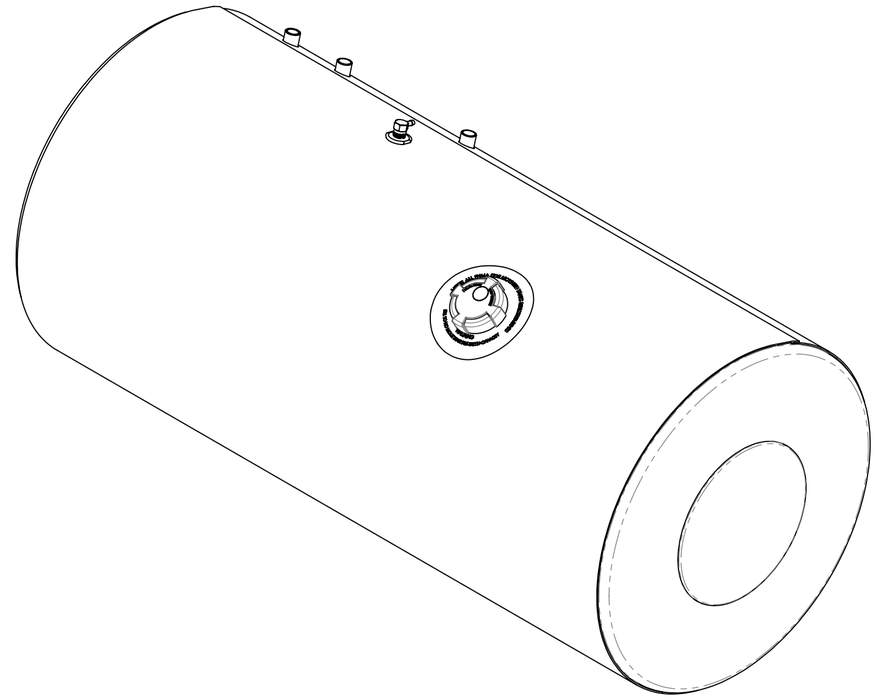

NOTES FOR STANDARD CONSTRUCTION:
...MEETS FMCSA REQUIREMENTS.
...PRESSURE TESTED @ 5psi
...INTERIOR FREE OF FOREIGN MATTER.
...FILLER CAP,DRAW TUBE,DRAIN PLUG & VENT PROVIDED.
...FULL BAFFLE(S) WHERE SHOWN
...ALUMINUM CONSTRUCTION:
5052-H32 ALUMINUM, BRIGHT FINISH
HEADS ARE 0.100" & SHELL IS 0.125"
...ALL OPENINGS PLUGGED PRIOR TO SHIPPING

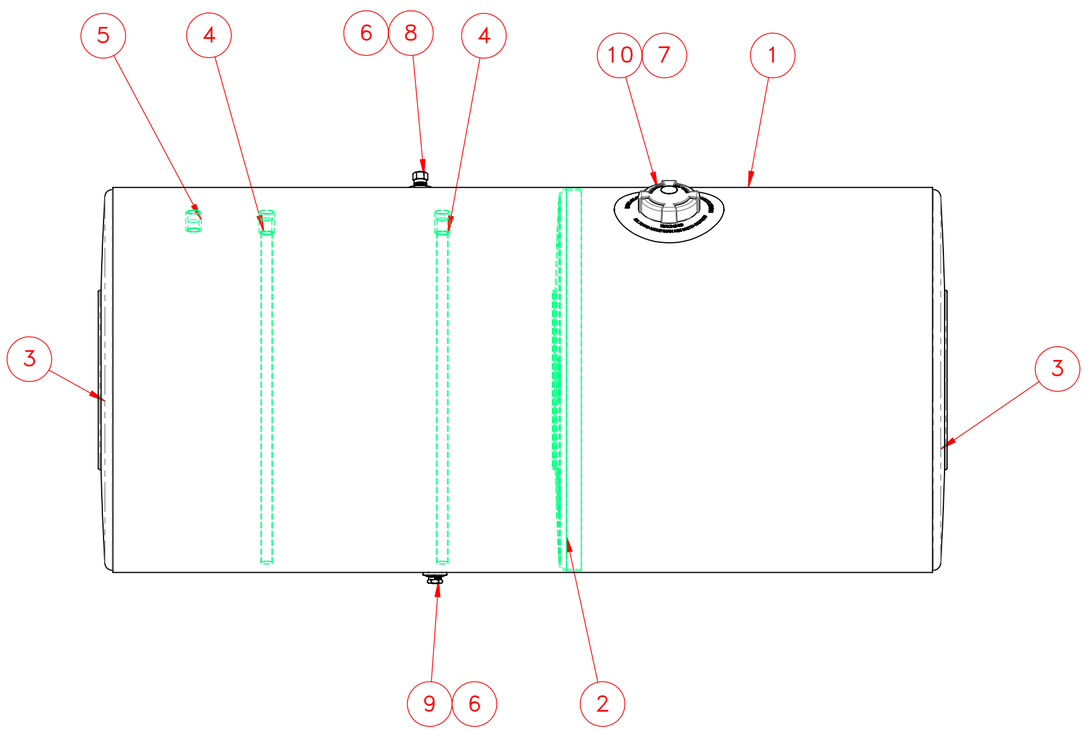

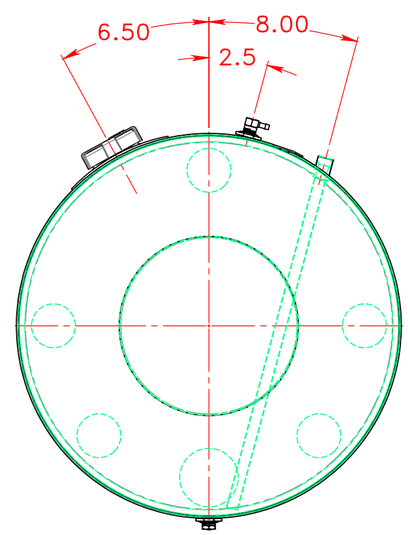

ITEM NO.	PART NUMBER	DESCRIPTION	QTY.
1	116-0436	1/8" Aluminium Wrap	1
2	162-0056	26" Aluminum Baffle	1
3	160-0056	26" Aluminum Head	2
4	490-0101	1/2" FNPT Down Tube	2
5	312-0006	1/2" NPT Coupling	1
6	260-0005	1/2" FNPT Aluminum weld flange	2
7	316-0094	Filler 3" Pocket Flange	1
8	454-0937	1/2" NPT Ball Check Vent	1
9	458-0100	1/2" NPT Ball Check Drain Plug	1
10	452-1628	Fuel Cap 3" Pressure Relief	1

PROPRIETARY AND CONFIDENTIAL
THE INFORMATION CONTAINED IN THIS DRAWING IS THE SOLE PROPERTY OF PROPOWER MFG. INC. ANY REPRODUCTION IN PART OR AS A WHOLE WITHOUT THE WRITTEN PERMISSION OF PROPOWER MFG. INC. IS PROHIBITED.

UNLESS OTHERWISE SPECIFIED:
DIMENSIONS ARE IN INCHES
TOLERANCES:
FRACTIONAL ± 1/16
ANGULAR: MACH ± 1° BEND ± 1°
TWO PLACE DECIMAL ± .06
THREE PLACE DECIMAL ± .031
INTERPRET GEOMETRIC TOLERANCING PER:
MATERIAL ALUMINUM
FINISH
DO NOT SCALE DRAWING

	NAME	DATE
DRAWN	A.B	02/10/14
CHECKED		
ENG APPR.		
MFG APPR.		
Q.A.		

COMMENTS:
THIRD ANGLE PROJECTION

PROPOWER MFG. INC.
WINDSOR, ONTARIO, CANADA
Ph: 519-737-1197 Fax: 519-737-1918
TOLL FREE 1-877-741-2365 Web; metaltanks.com

TITLE:
IN-L26CFA58
133 US GROSS GALLONS
126 USEBLE GALLONS
DIESEL FUEL TANK

SIZE C | DWG. NO. 16357 | REV
SCALE: 1:8 | WEIGHT: 68 LBS | SHEET 1 OF 2