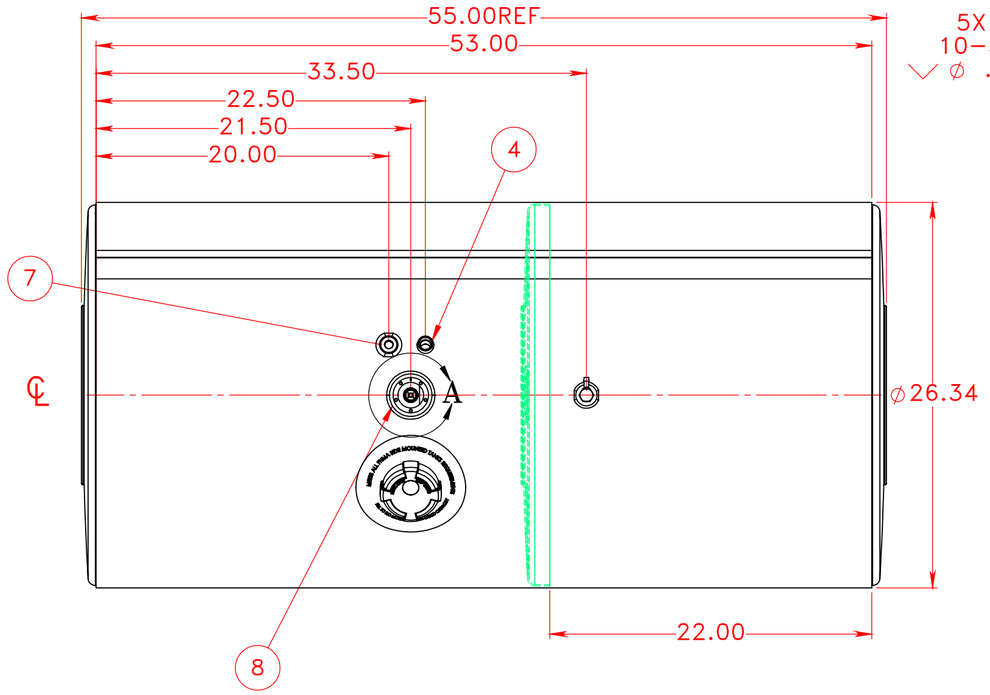

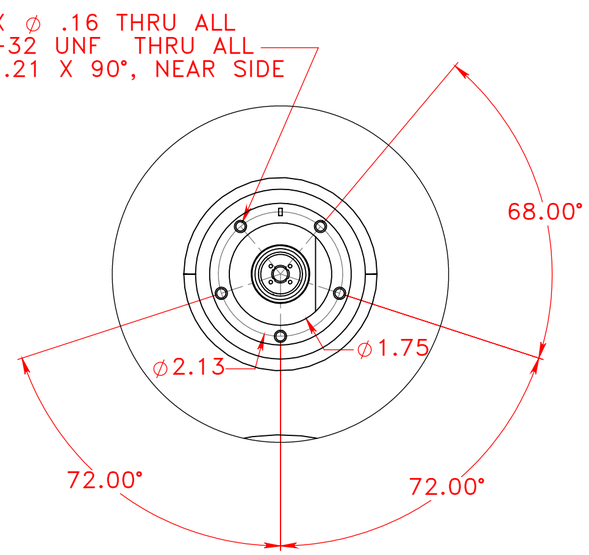

DETAIL A
SCALE 1 : 2

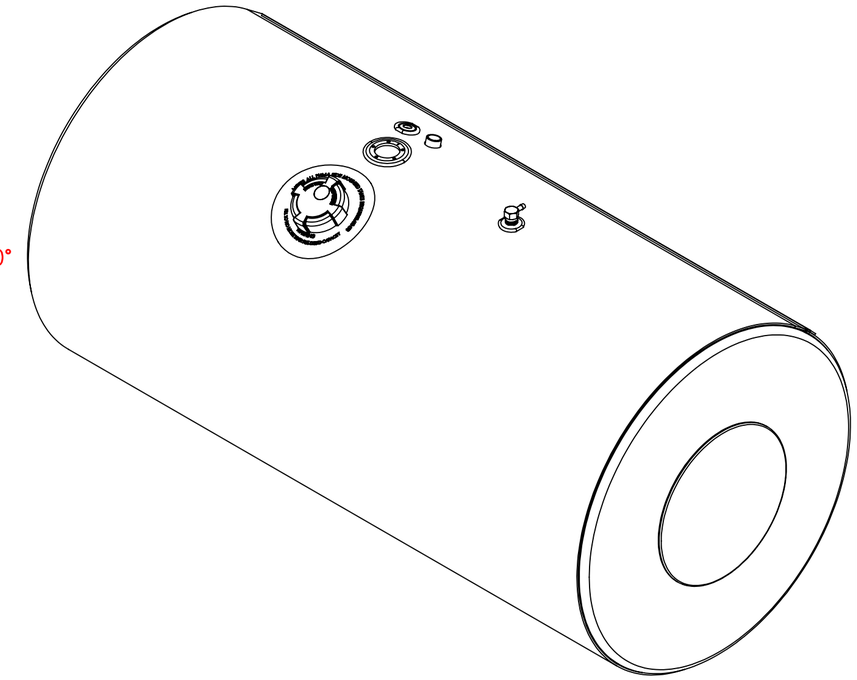

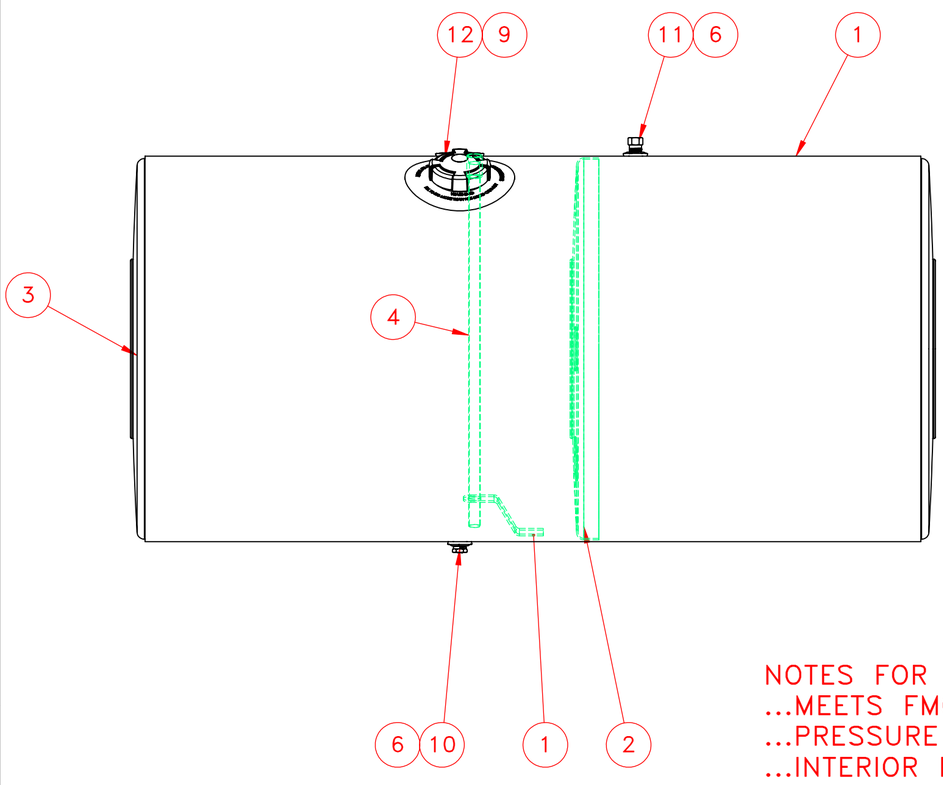

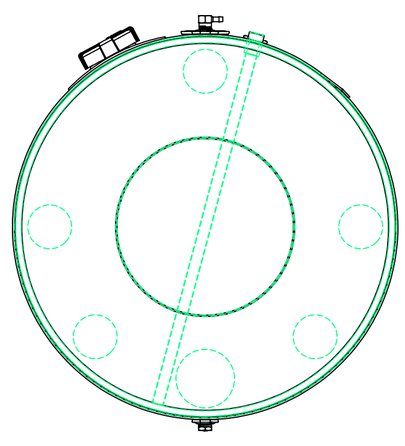

ITEM NO.	PART NUMBER	DESCRIPTION	QTY.
1	116-0782	1/8" Auminum Wrap	1
2	162-0056	26" Aluminum Baffle	1
3	160-0056	26" Aluminum Head	2
4	490-0101	1/2" FNPT Down Tube	1
5	490-3001	Down Tube Support	1
6	260-0005	1/2" FNPT Aluminum weld flange	2
7	260-0003	3/8" FNPT Aluminum weld flange	1
8	265-0009	Aluminum Float Riser	1
9	316-0094	Filler 3" Pocket Flange	1
10	458-0100	1/2" NPT Ball Check Drain Plug	1
11	454-0937	1/2" NPT Ball Check Vent	1
12	452-1628	Fuel Cap 3" Pressure Relief	1

NOTES FOR STANDARD CONSTRUCTION:
...MEETS FMCSA REQUIREMENTS.
...PRESSURE TESTED @ 5psi
...INTERIOR FREE OF FOREIGN MATTER.
...FILLER CAP, DRAIN PLUG & VENT PROVIDED.
...FULL BAFFLE(S) WHERE SHOWN
...ALUMINUM CONSTRUCTION:
5052-H32 ALUMINUM, BRIGHT FINISH
HEADS ARE 0.100" & SHELL IS 0.125"
...ALL OPENINGS PLUGGED PRIOR TO SHIPPING

PROPRIETARY AND CONFIDENTIAL
THE INFORMATION CONTAINED IN THIS DRAWING IS THE SOLE PROPERTY OF PROPOWER MFG. INC. ANY REPRODUCTION IN PART OR AS A WHOLE WITHOUT THE WRITTEN PERMISSION OF PROPOWER MFG. INC. IS PROHIBITED.

UNLESS OTHERWISE SPECIFIED:
DIMENSIONS ARE IN INCHES
TOLERANCES:
FRACTIONAL ± 1/16
ANGULAR: MACH ± 1° BEND ± 1°
TWO PLACE DECIMAL ± .06
THREE PLACE DECIMAL ± .031
INTERPRET GEOMETRIC TOLERANCING PER:
MATERIAL ALUMINUM
FINISH
DO NOT SCALE DRAWING

	NAME	DATE
DRAWN	A.B	03/18/16
CHECKED		
ENG APPR.		
MFG APPR.		
Q.A.		

COMMENTS:
THIRD ANGLE PROJECTION

PROPOWER MFG. INC.
WINDSOR, ONTARIO, CANADA
Ph; 519-737-1197 Fax; 519-737-1918
TOLL FREE 1-877-741-2365 Web; metaltanks.com

TITLE: WS-26CFA55
126 US GROSS GALLONS
120 USEBLE GALLONS
DIESEL FUEL TANK

SIZE C | DWG. NO. 20186 | REV
SCALE: 1:8 | WEIGHT: 74 LBS | SHEET 1 OF 2