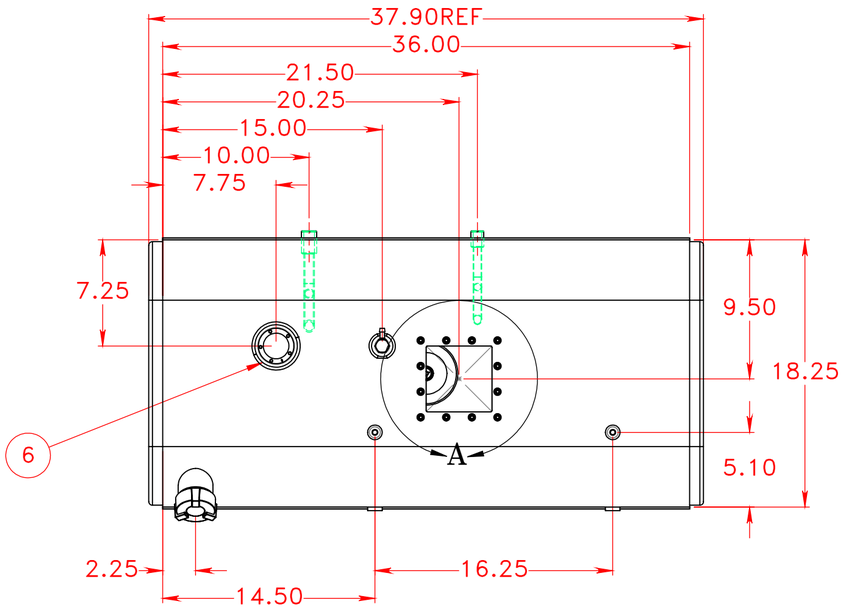

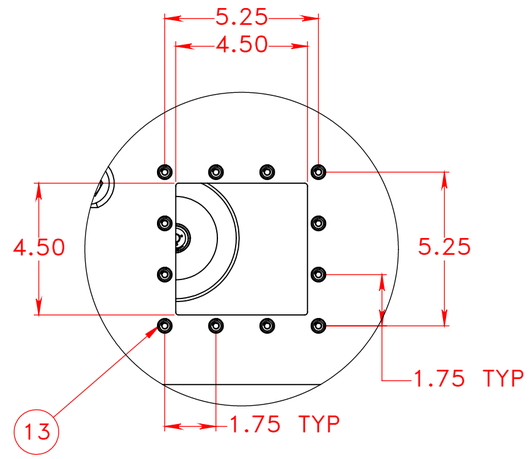

DETAIL A
SCALE 1 : 4

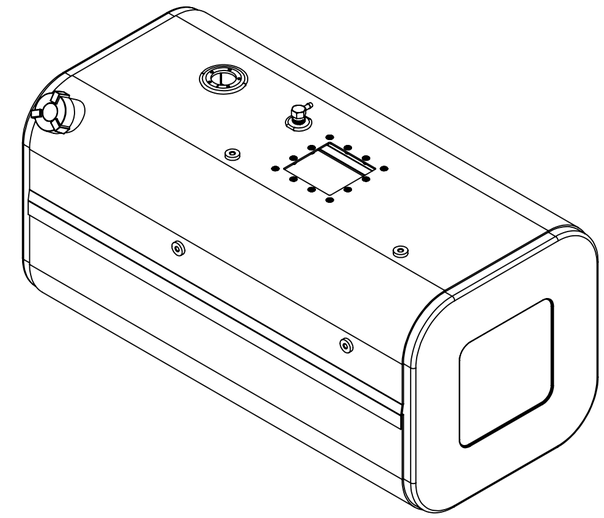

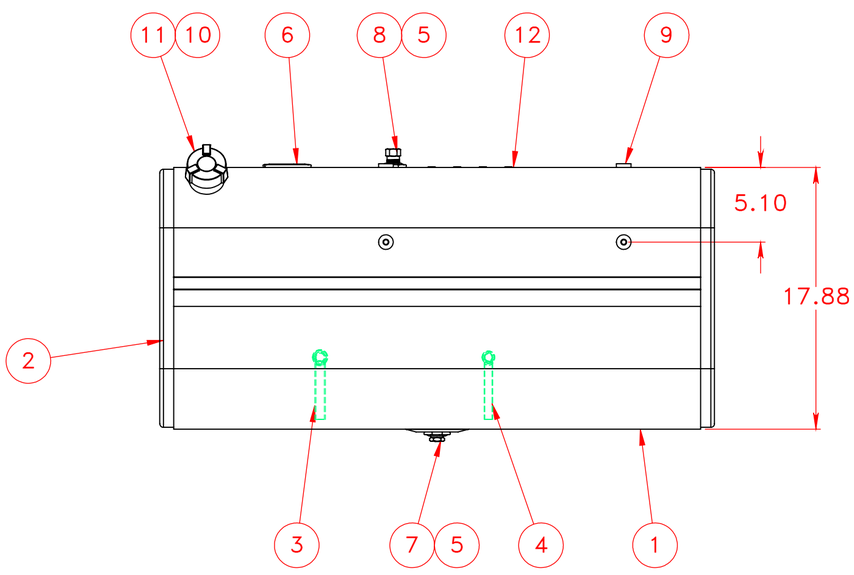

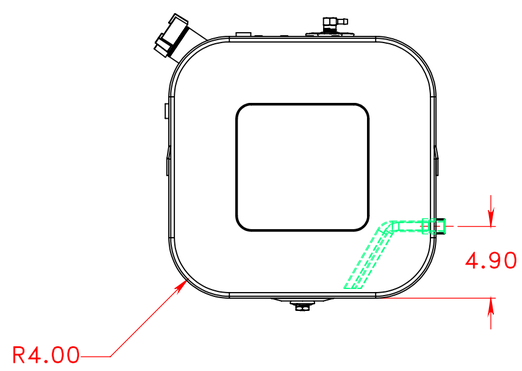

ITEM NO.	PART NUMBER	DESCRIPTION	QTY.
1	126-0013	12 ga HRPO Steel Wrap Bottom	1
2	170-0014	17.63x18 Head	2
3	490-1002	1/2" Steel Coupling Down Tube	1
4	490-1003	3/8" Steel Coupling Down Tube	1
5	270-0007	1/2" FNPT Steel weld flange	2
6	275-0002	Steel Float Riser	1
7	458-0100	1/2" NPT Ball Check Drain Plug	1
8	454-0937	1/2" NPT Ball Check Vent	1
9	227-0001	Step Boss	4
10	326-0001	2" Steel Filler Neck	1
11	452-0998	2" Thermal Relief Fuel Cap	1
12	126-0480	12ga HRPO Steel Top Wrap	1
13	518-0009	1/4"-20 Rivet Nut	12

NOTES FOR STANDARD CONSTRUCTION:

...PRESSURE TESTED @ 5psi PER FMCSA
...INTERIOR FREE OF FOREIGN MATTER.
...FILLER CAP, DRAIN PLUG, DRAW TUB & VENT PROVIDED.
...STEEL CONSTRUCTION 12ga HRPO
...STEEL FINISH; SEMI-GLOSS BLACK ENAMEL APPLIED.
...ALL OPENINGS PLUGGED & THE INTERIOR FOGGED
WITH ANTI-CORROSION OIL PRIOR TO SHIPPING

PROPRIETARY AND CONFIDENTIAL
THE INFORMATION CONTAINED IN THIS DRAWING IS THE SOLE PROPERTY OF PROPOWER MFG. INC. ANY REPRODUCTION IN PART OR AS A WHOLE WITHOUT THE WRITTEN PERMISSION OF PROPOWER MFG. INC. IS PROHIBITED.

UNLESS OTHERWISE SPECIFIED:
DIMENSIONS ARE IN INCHES
TOLERANCES:
FRACTIONAL ± 1/16
ANGULAR: MACH ± 1° BEND ± 1°
TWO PLACE DECIMAL ± .06
THREE PLACE DECIMAL ± .031
INTERPRET GEOMETRIC TOLERANCING PER:
MATERIAL HRPO STEEL
FINISH
DO NOT SCALE DRAWING

	NAME	DATE
DRAWN	A.B	06/03/15
CHECKED		
ENG APPR.		
MFG APPR.		
Q.A.		

COMMENTS:
THIRD ANGLE PROJECTION

PROPOWER MFG. INC.
WINDSOR, ONTARIO, CANADA
Ph; 519-737-1197 Fax; 519-737-1918
TOLL FREE 1-877-741-2365 Web; metaltanks.com

TITLE: FL-R18-18RFS38-C
50 US GROSS GALLONS
47 USEBLE GALLONS
DIESEL FUEL TANK

SIZE C | DWG. NO. 18776 | REV
SCALE: 1:8 | WEIGHT: 110 LBS | SHEET 1 OF 2