REVISIONS				
ZONE	REV.	DESCRIPTION	DATE	APPROVED
C4	A	ADDED REINFORCEMENT ANGLE'S	7/4/2018	J.C

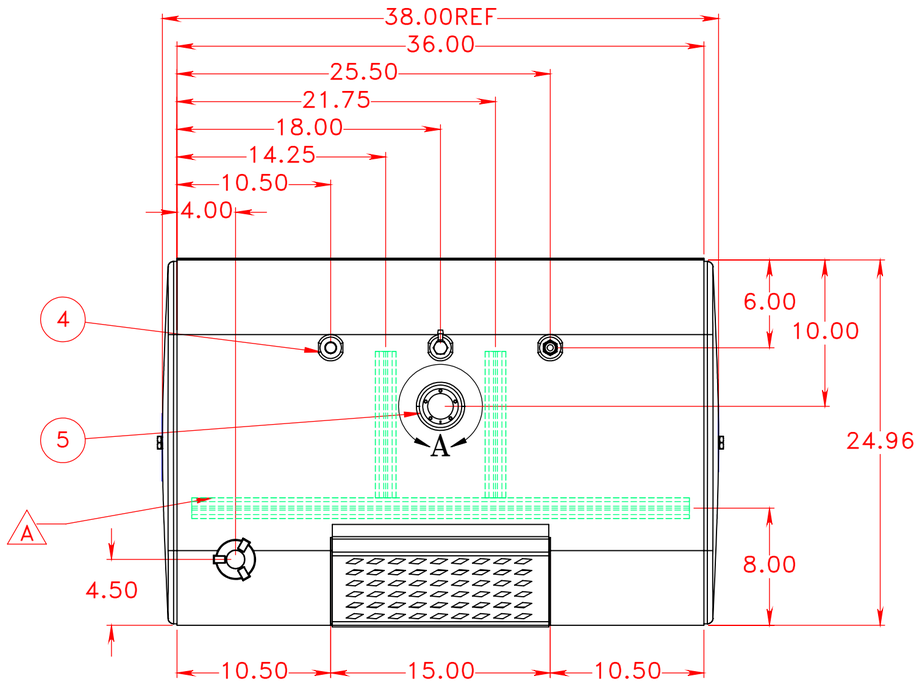

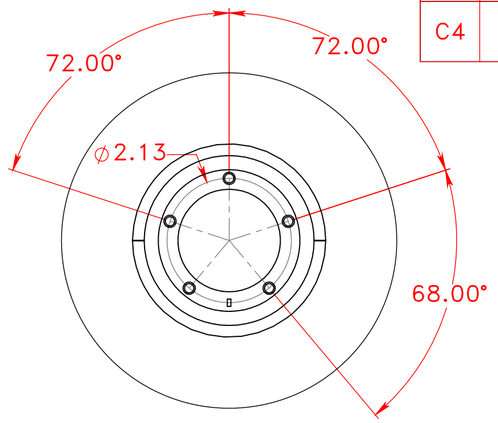

DETAIL A
SCALE 1 : 2

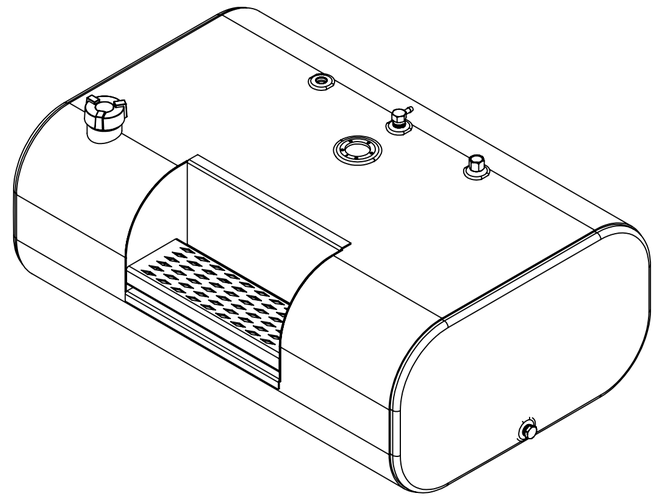

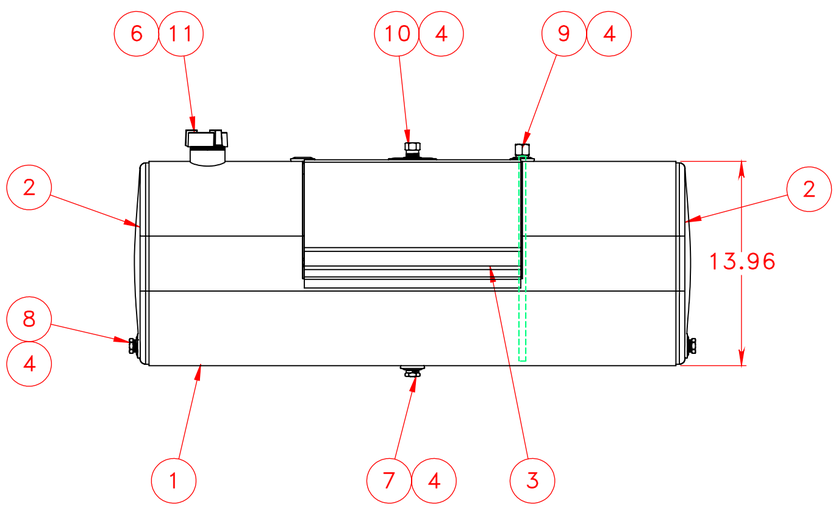

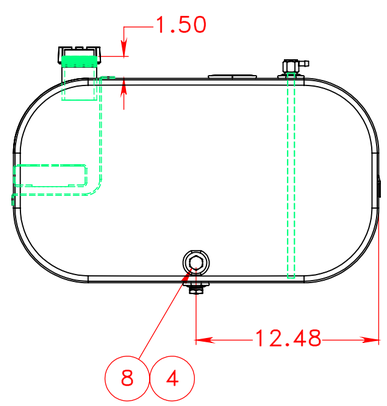

ITEM NO.	PART NUMBER	DESCRIPTION	QTY.
1	126-0618	12ga HRPO Steel Wrap	1
2	170-0011	14 x 25 Head	2
3	229-0001	Step Insert	1
4	270-0007	1/2" FNPT Steel weld flange	6
5	275-0002	Steel Float Riser	1
6	326-0001	2" Steel Filler Neck	1
7	458-0100	1/2" NPT Ball Check Drain Plug	1
8	368-0010	1/2" NPT Brass Plug	2
9	490-0014-Z	1/2" NPT Down Tube	1
10	454-0937	1/2" NPT Ball Check Vent	1
11	452-0998	2" Thermal Relief Fuel Cap	1
12	222-0001	3/16x1x1x10" Angle	2
13	222-0001	3/16x1x1x34" Angle	1

NOTES FOR STANDARD CONSTRUCTION:

...PRESSURE TESTED @ 5psi PER FMCSA
...INTERIOR FREE OF FOREIGN MATTER.
...FILLER CAP,DRAIN PLUG,DRAW TUB & VENT PROVIDED.
...STEEL CONSTRUCTION 12ga HRPO
...STEEL FINISH;
SEMI-GLOSS BLACK ENAMEL APPLIED.
...ALL OPENINGS PLUGGED & THE INTERIOR FOGGED
WITH ANTI-CORROSION OIL PRIOR TO SHIPPING

PROPRIETARY AND CONFIDENTIAL
THE INFORMATION CONTAINED IN THIS DRAWING IS THE SOLE PROPERTY OF PROPOWER MFG. INC. ANY REPRODUCTION IN PART OR AS A WHOLE WITHOUT THE WRITTEN PERMISSION OF PROPOWER MFG. INC. IS PROHIBITED.

UNLESS OTHERWISE SPECIFIED:
DIMENSIONS ARE IN INCHES
TOLERANCES:
FRACTIONAL ± 1/16
ANGULAR: MACH ± 1° BEND ± 1°
TWO PLACE DECIMAL ± .06
THREE PLACE DECIMAL ± .031
INTERPRET GEOMETRIC TOLERANCING PER:
MATERIAL HRPO STEEL
FINISH
DO NOT SCALE DRAWING

	NAME	DATE
DRAWN	A.B	12/07/16
CHECKED		
ENG APPR.		
MFG APPR.		
Q.A.		

COMMENTS:

THIRD ANGLE PROJECTION

PROPOWER MFG. INC.
WINDSOR, ONTARIO, CANADA
Ph; 519-737-1197 Fax; 519-737-1918
TOLL FREE 1-877-741-2365 Web; metaltanks.com

TITLE:
FD-R14-25RFS38-D
50 US GROSS GALLONS
45 USEBLE GALLONS
DIESEL FUEL TANK

SIZE C | DWG. NO. 21574 | REV A
SCALE: 1:8 | WEIGHT:106 LBS | SHEET 1 OF 2