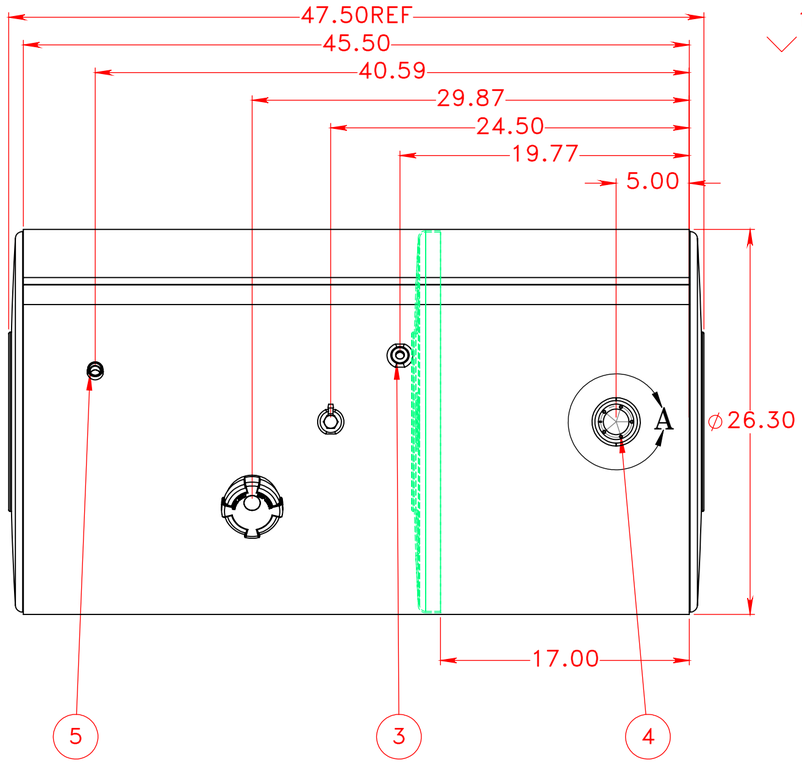

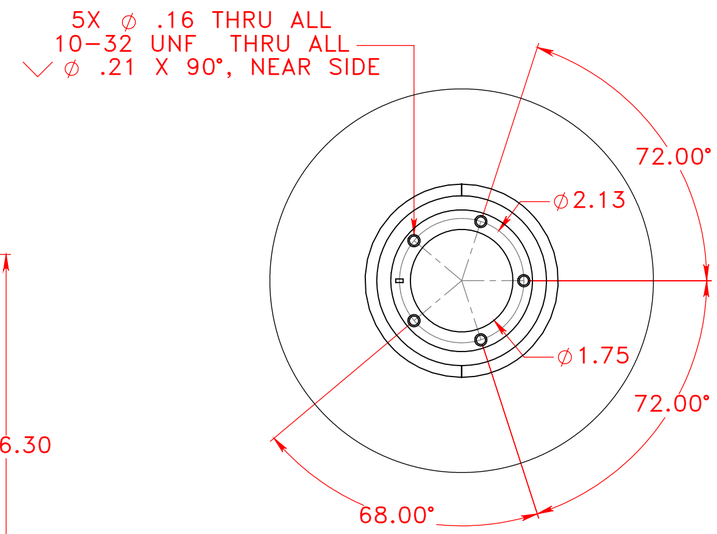

DETAIL A
SCALE 1 : 2

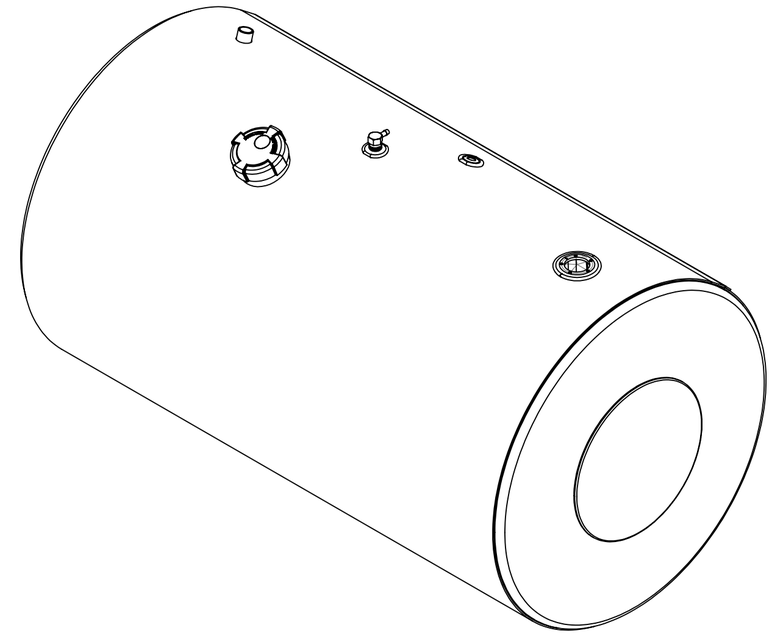

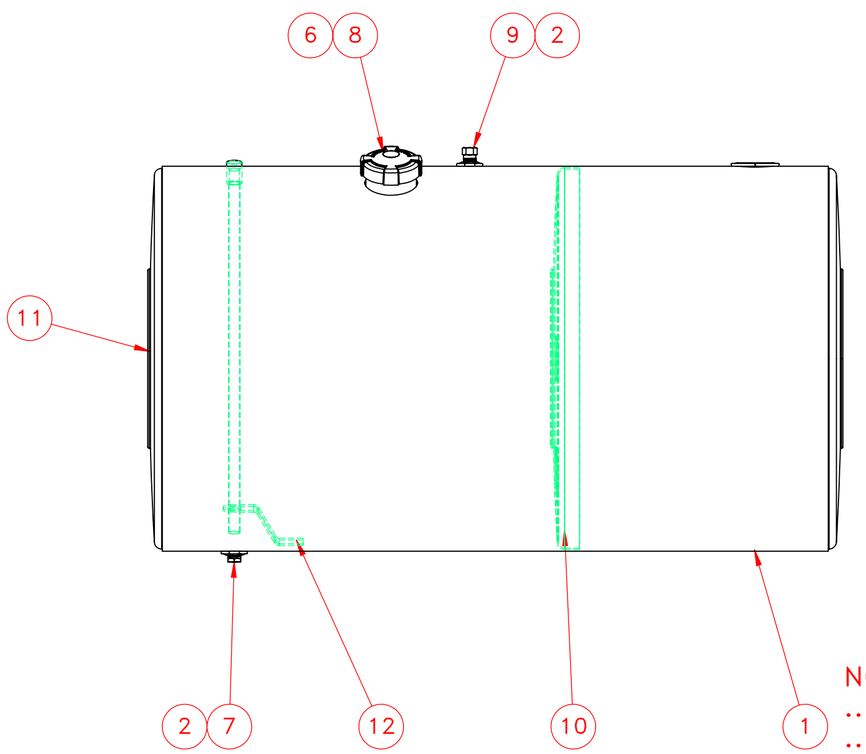

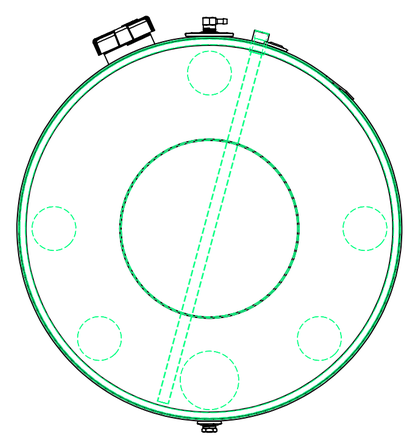

ITEM NO.	PART NUMBER	DESCRIPTION	QTY.
1	116-0762	1/8" Aluminum Wrap	1
2	260-0005	1/2" FNPT Aluminum weld flange	2
3	260-0003	3/8" FNPT Aluminum weld flange	1
4	265-0009	Aluminum Float Riser	1
5	490-0101	1/2" FNPT Down Tube	1
6	316-0014	3" Aluminum Filler Neck	1
7	458-0100	1/2" NPT Ball Check Drain Plug	1
8	452-1628	Fuel Cap 3" Pressure Relief	1
9	454-0937	1/2" NPT Ball Check Vent	1
10	162-0056	26" Aluminum Baffle	1
11	160-0056	26" Aluminum Head	2
12	490-3001	Down Tube Support	1

NOTES FOR STANDARD CONSTRUCTION:
...MEETS FMCSA REQUIREMENTS.
...PRESSURE TESTED @ 5psi
...INTERIOR FREE OF FOREIGN MATTER.
...FILLER CAP,DRAW TUBE,DRAIN PLUG & VENT PROVIDED.
...FULL BAFFLE(S) WHERE SHOWN
...ALUMINUM CONSTRUCTION:
5052-H32 ALUMINUM, BRIGHT FINISH
HEADS ARE 0.100" & SHELL IS 0.125"
...ALL OPENINGS PLUGGED PRIOR TO SHIPPING

PROPRIETARY AND CONFIDENTIAL
THE INFORMATION CONTAINED IN THIS DRAWING IS THE SOLE PROPERTY OF PROPOWER MFG. INC. ANY REPRODUCTION IN PART OR AS A WHOLE WITHOUT THE WRITTEN PERMISSION OF PROPOWER MFG. INC. IS PROHIBITED.

UNLESS OTHERWISE SPECIFIED:
DIMENSIONS ARE IN INCHES
TOLERANCES:
FRACTIONAL ± 1/16
ANGULAR: MACH ± 1° BEND ± 1°
TWO PLACE DECIMAL ± .06
THREE PLACE DECIMAL ± .031
INTERPRET GEOMETRIC TOLERANCING PER:
MATERIAL ALUMINUM
FINISH
DO NOT SCALE DRAWING

	NAME	DATE
DRAWN	A.B	02/19/16
CHECKED		
ENG APPR.		
MFG APPR.		
Q.A.		

COMMENTS:
THIRD ANGLE PROJECTION

PROPOWER MFG. INC.
WINDSOR, ONTARIO, CANADA
Ph; 519-737-1197 Fax; 519-737-1918
TOLL FREE 1877-7412365 Web; metaltanks.com

TITLE:
IN-L26CFA47-B
108 US GROSS GALLONS
105 USEBLE GALLONS
DIESEL FUEL TANK

SIZE C | DWG. NO. 20076 | REV
SCALE: 1:8 | WEIGHT: | SHEET 1 OF 2